Ryberg

Specifications Sheet: Ryberg OMNIA disinfection Robot

ID	Component
1	Power button
2	Emergency button
3	Charging port
4	Charging indicator
5	Fuse access hatch
6	Robot machine label
7	LED indicators
8	Driven wheels
9	UVC lamp
10	Handlebar connection points

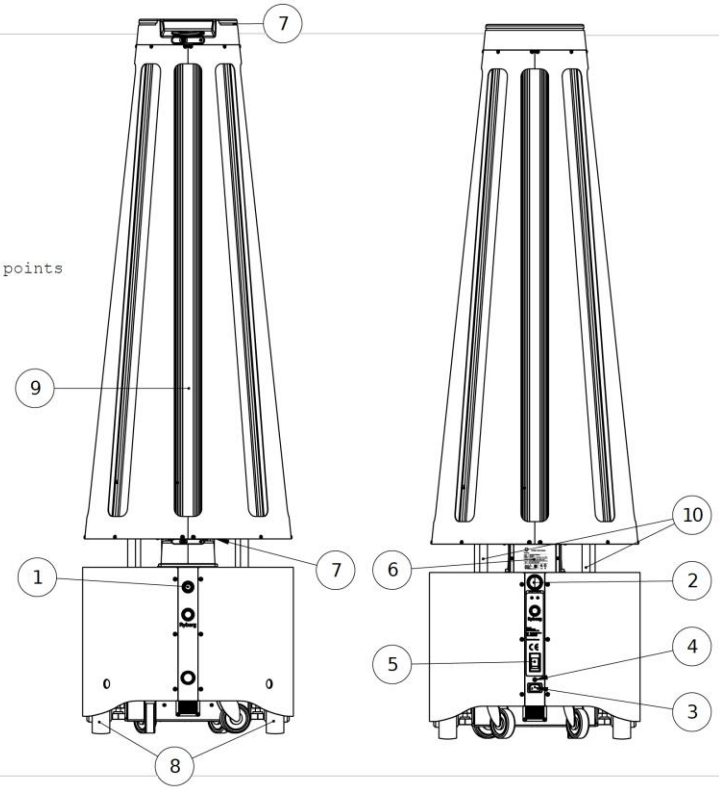

Year of construction	2023
Type/Model	Omnia UV-C Gen1 BSE1/21-01
Dimensions (L × W × H)	540 × 540 × 1880 mm
Weight	125 kg
Operation temperature	10 – 40 °C
Position	Vertical
Maximum slope	7 degrees
Maximum bump height	2 cm (with ramps) 0,8 cm (without ramps)
Life span	7 years
Voltage	110V - 230V; 50/60 Hz
Power	1550 Watt

UV-C tube lamps	
UV lamp model	871150061851110
Number of UV Lamps	8
Power consumption (watts per lamp)	75 W
UV Output (Watts per lamp)	25.W
Average Effective Life	9.000 h



Ryberg

Ryberg B.V.
Molengraaffsingel 12
2629 JD Delft
The Netherlands

info@ryberghealthcare.com